CATEGORY	DESCRIPTION	P/N #
CONNECTOR	MINI USB 5P B TYPE DIP	UB3051-11FX0-001A

REV.	ECN NO	DESCRIPTION	REVISED	DATE
A01	————	New Release	Luguan	2009.08.20

UB3051-11FX0-001A

Material & Plating

Table 1

X	Terminal Plating
1	Gold Flash Plating
3	Au 3u" Plating
7	Au 15u" Plating

SPECIFICATIONS:

1. VOLTAGE&CURRENT RATING: AC 5V&1A.
2. DIELECTRIC WITHSTANDING VOLTAGE:AC 100V FOR 1 MINUTE.
3. INSULATION RESISTANCE: 100 MΩ MIN. AT DC 500V.
4. CONTACT RESISTANCE: 50 mΩ MAX.
5. CONTACT INSERTION FORCE:35N MAX.
6. CONTACT WITHDRAWAL FORCE:3N MIN.
7. TEMPERATURE: −20°C TO +85°C.

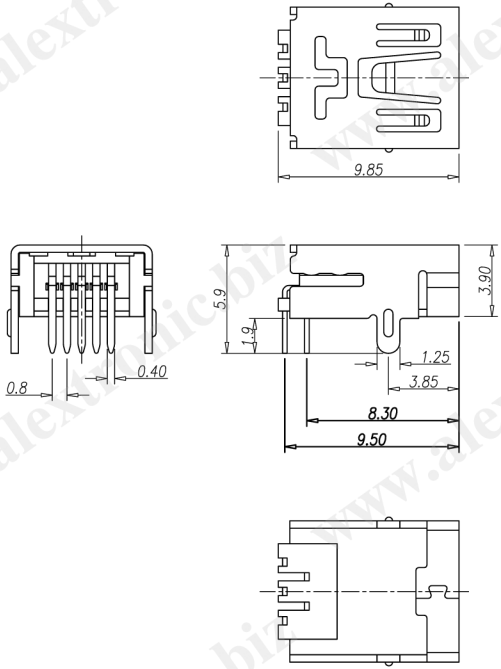

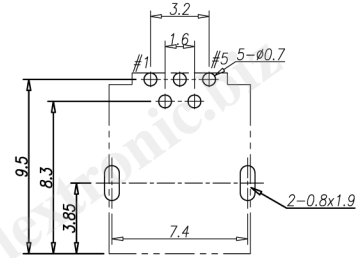

Recommend PCB Layout
(Jack Top View)
Tolerance: ±0.05mm
Recommend PCB Thickness: 1.6mm

NO.	PART NAME	Q'TY	MATERIAL	PLATING & COLOR	Remark
c	Terminal	5	Phosphor Bronze, T=0.25mm	See Table 1	
b	Shell	1	Brass, T=0.4mm	Ni Plating	
a	Housing	1	LCP UL94V-0	Black	

UNLESS OTHERWISE SPECIFED TOLERANCES

DECIMALS: X :±0.5, X.X :±0.3, X.XX :±0.2

ANGLES: X :±2°, X.X :±1°

Product Drawing
ALEXTRONIC

SCALE:1/1	UNIT: mm	DWG.NO:
SIZE: A3	PAGE:1 OF 1	REV:A01

WI-061-558

APPROVED BY	CHECKED BY	PREPARED BY
WYX	Pengjie	Luguan

CUSTOMER COPY

www.alextronic.biz